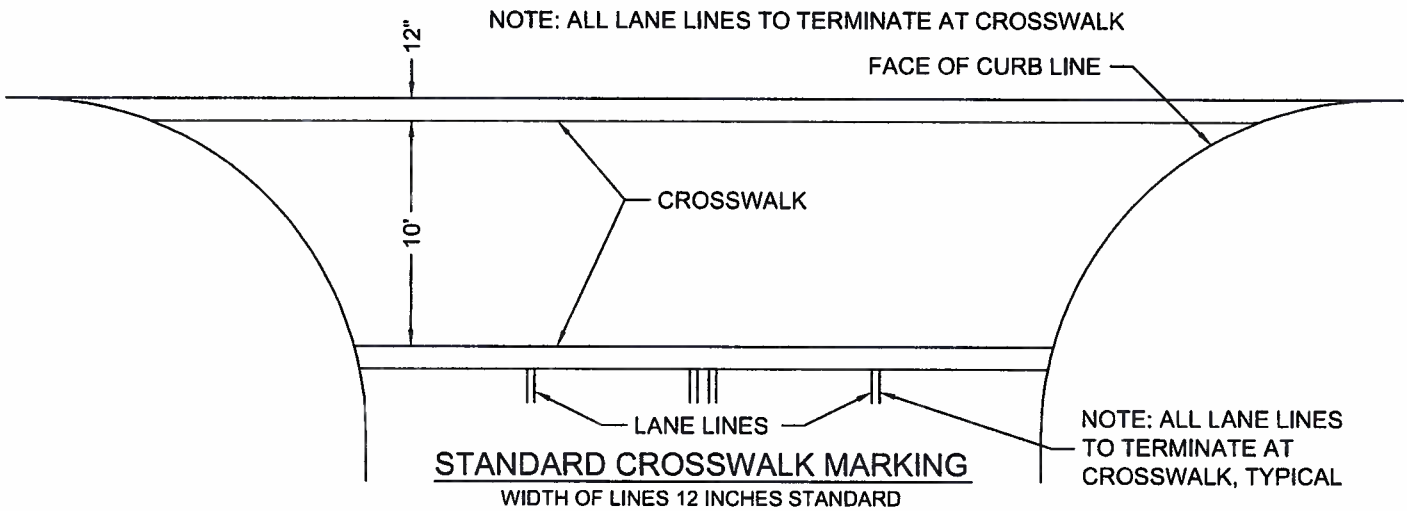

STANDARD CROSSWALK MARKING

WIDTH OF LINES 12 INCHES STANDARD
WIDTH OF WALK 10 FEET

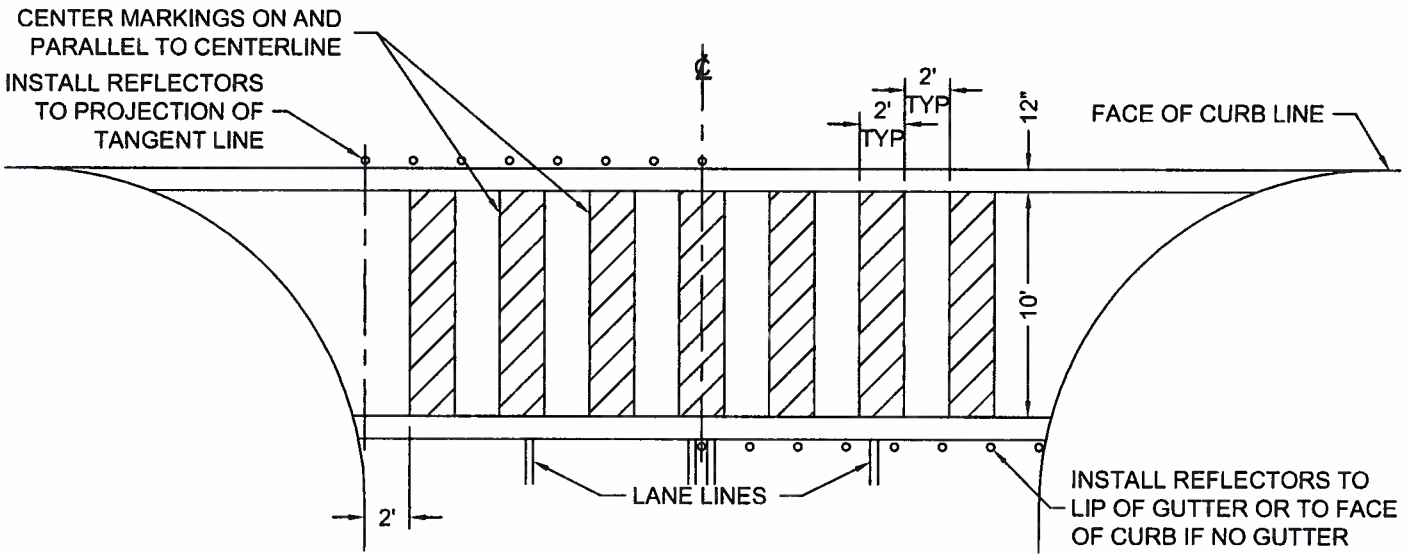

NON-CONTROLLED ZEBRA CROSSWALK MARKING

INTERSECTION - USE ONLY WHERE SPECIFIED

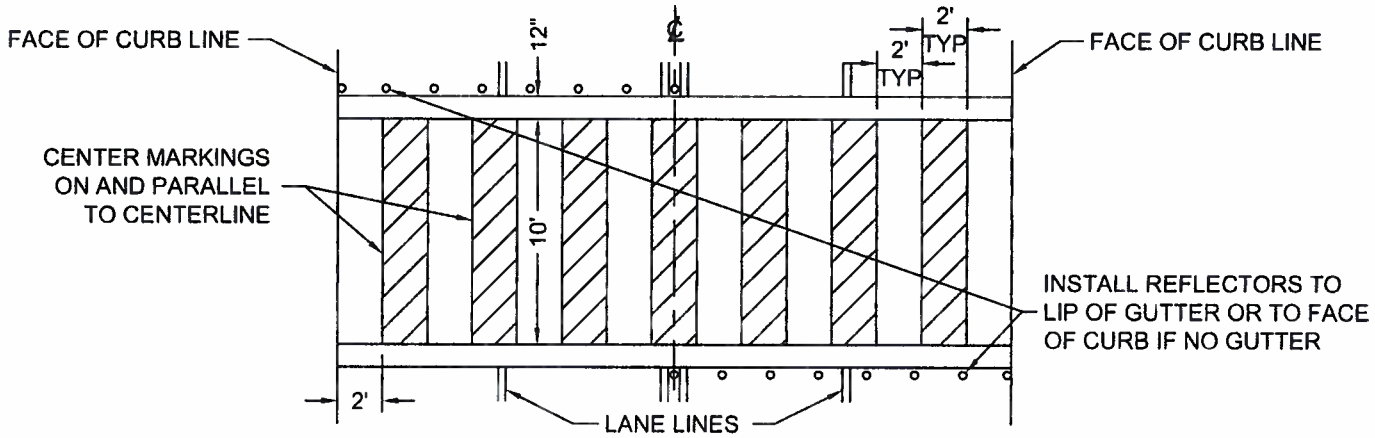

NON-CONTROLLED ZEBRA CROSSWALK MARKING

MID-BLOCK - USE ONLY WHERE SPECIFIED

NOT TO SCALE

Concord	CITY ENGINEER 12/4/13 DATE	SHEET 1 OF 1	CROSSWALK MARKINGS	S-26