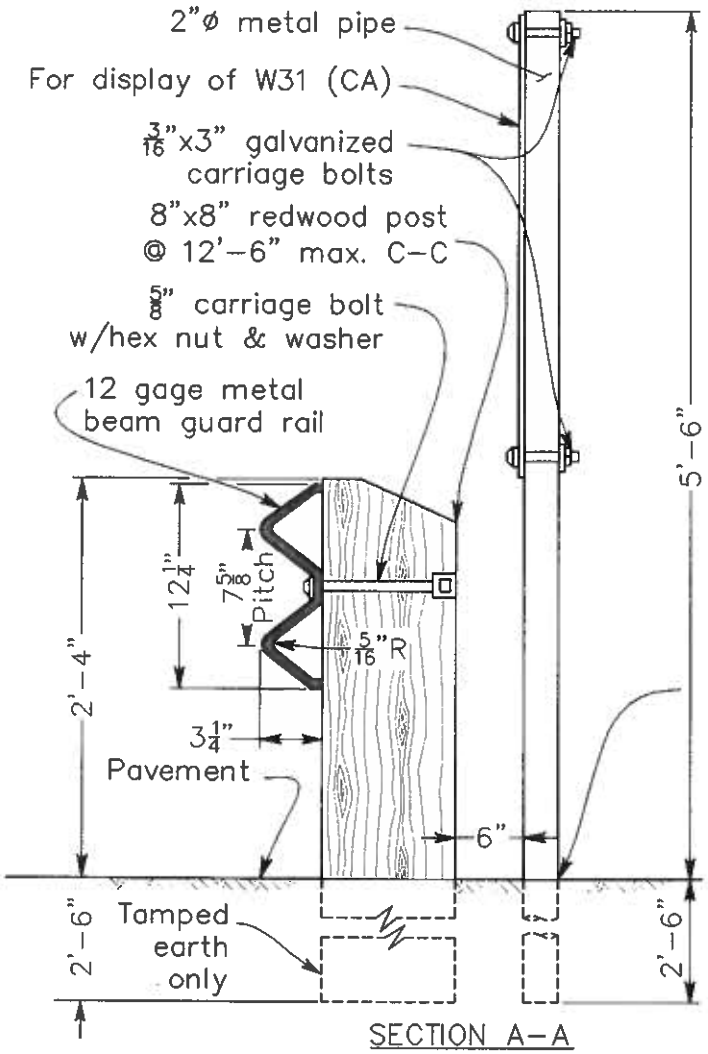

SECTION A-A
POST DETAILS

W 31 (CA)

30"x30" aluminum black letters on yellow, high intensity prizmatic (hip), reflective sheeting mount as shown.

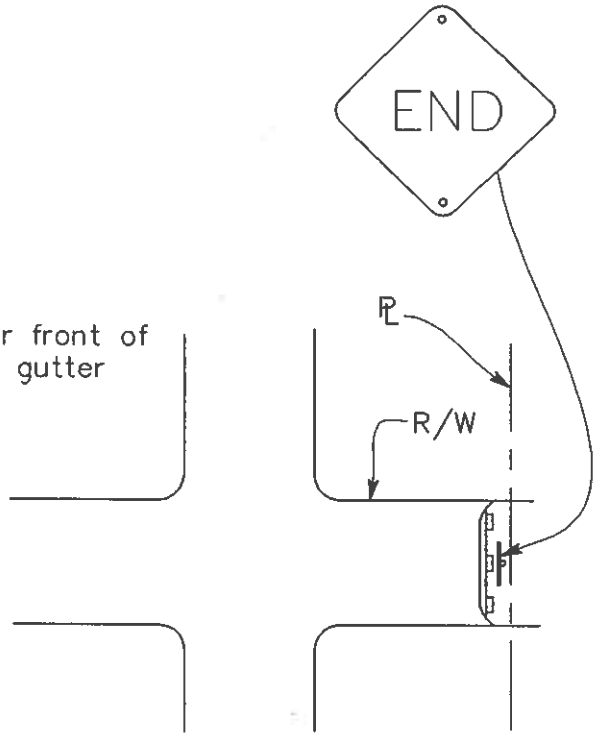

PLAN

ROADWAY WIDTH	W
32' and 36'	25'-0"
40'	37'-6"
64'	50'-0"

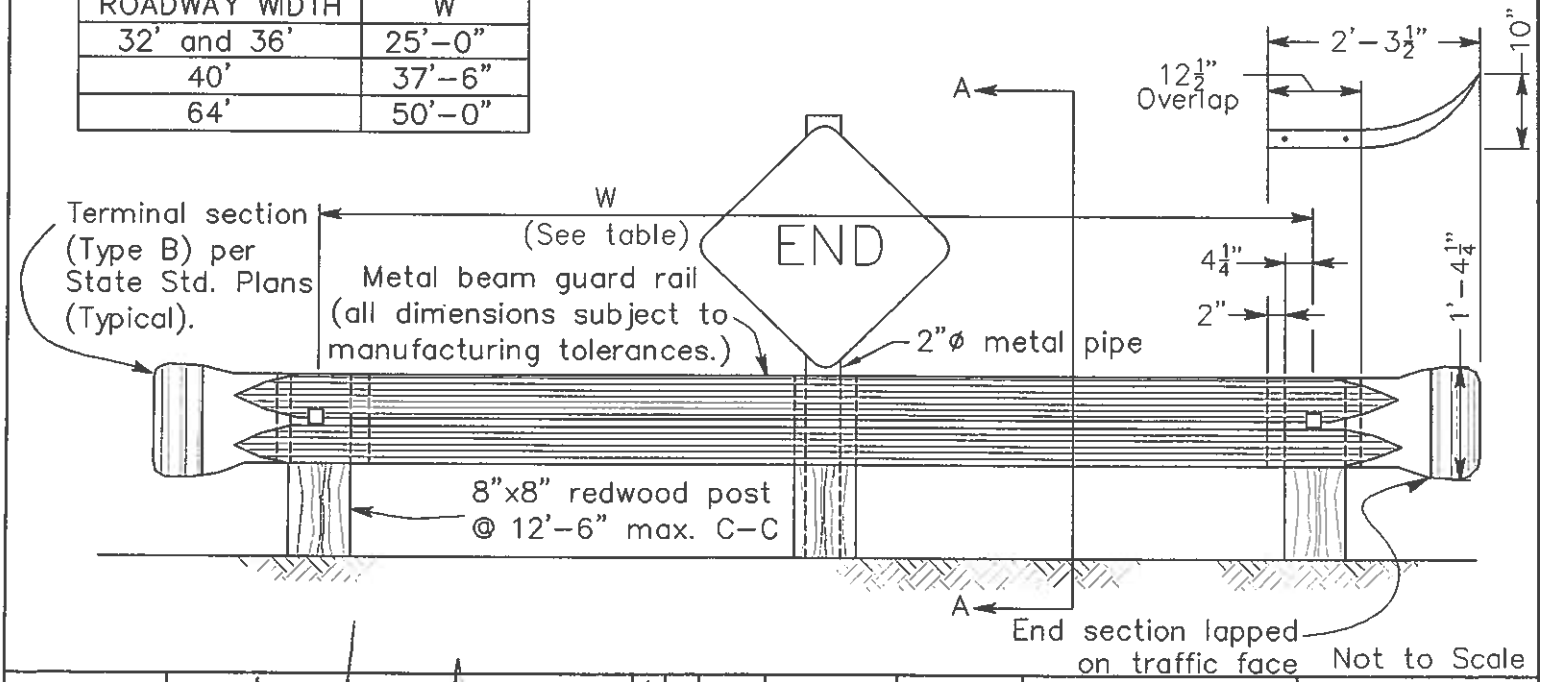

Not to Scale

Concord	City Engineer	Date	NO	BY	DATE	REVISION	SHEET 1 of 1	STREET BARRICADE	S-21
	Alex Pascual	02-24-09							