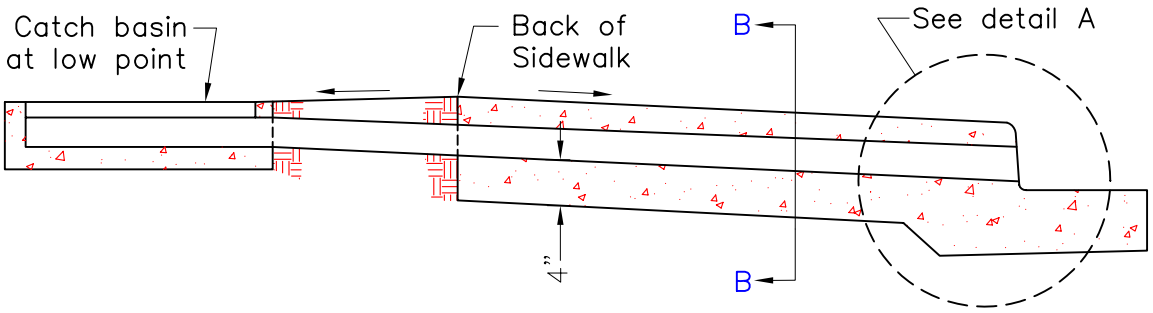

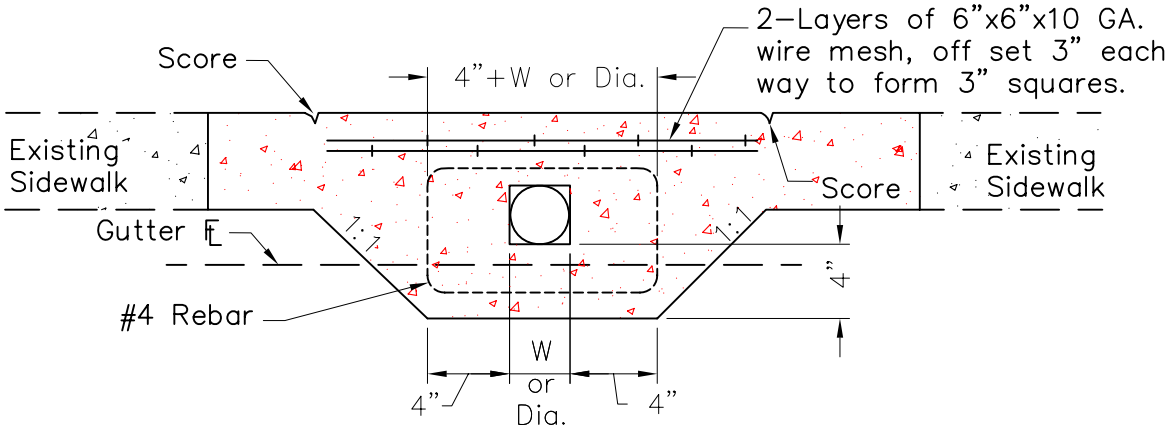

SECTION B-B
Transverse to drain

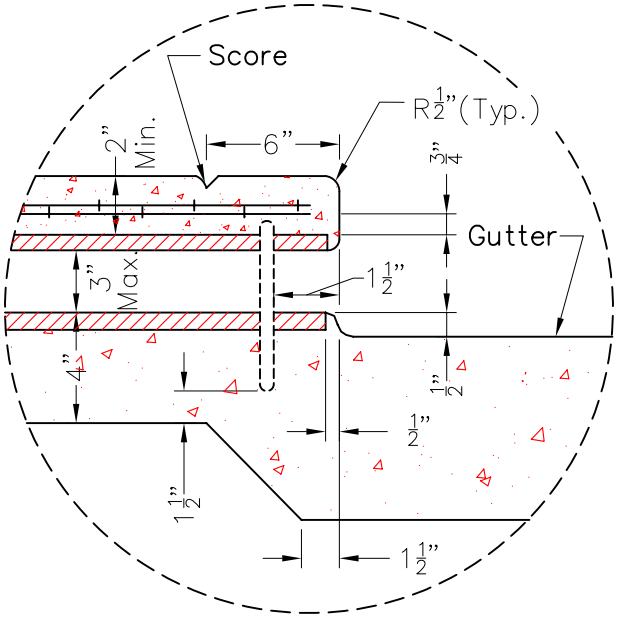

DETAIL A

See sheet 2 for notes.

Not to Scale

Concord	City Engineer	01/16/07 Date	NO	BY	DATE	REVISION	SHEET 1 of 2	SIDEWALK UNDERDRAIN	S-13

NOTES

1. If multiple conduits are used, space 4" clear between each conduit.
2. Maximum rectangular conduit shall be 3" x 6".
3. Concrete shall be Class "B".
4. Number and size of conduits for specified drainage area:

SIZE		3"	2–3"	3"	3"x4"	3"x5"	3"x6"
Area Drained (S.F.)	Parking lot	2,000	4,000	4,000	5,000	6,500	8,000
	Residential	5,000	10,000	6,200	10,000	10,500	16,000

5. Conduit shall be steel (Ga. 10 min.), PVC, or as approved by the Engineer.

Not to Scale

Concord	City Engineer	01/16/07 Date	NO	BY	DATE	REVISION	SHEET 2 of 2	SIDEWALK UNDERDRAIN	S–13